G. Lynn Shostack

Service Positioning Through Structural Change

The basis of any service positioning strategy is the service itself, but marketing offers little guidance on how to craft service processes for positioning purposes. A new approach suggests that within service systems, structural process design can be used to "engineer" services on a more scientific, rational basis.

WHEN a firm or provider establishes and maintains a distinctive place for itself and its offerings in the market, it is said to be successfully positioned. In the increasingly competitive service sector, effective positioning is one of marketing's most critical tasks.

For some marketers (e.g., Ries and Trout 1981), positioning is strictly a communications issue. The product or service is a given and the objective is to manipulate consumer perceptions of reality. As Lovelock (1984) rightly points out, however, positioning is more than just advertising and promotion. Market position can be affected by pricing, distribution and, of course, the product itself, which is the core around which all positioning strategies revolve.

Apart from promotion, pricing, and distribution, the product is indeed a critical, manageable factor in positioning. Products often are engineered explicitly to reach certain markets, as the original Mustang was designed to reach the youth market and light beer was created to tap the calorie-conscious consumer. Sometimes products are invented first and positioned afterward. The Xerox copier and the Polaroid camera are examples of products that were first created, then positioned to various markets. Finally, an existing product may be changed in order to change its market position, as the Jeep was altered physically from a military vehicle to a vehicle for the family market.

Services are not things, however. McLuhan (1964) perhaps put it best and most succinctly more than 20 years ago when he declared that the *process* is the product. We say "airline" when we mean "air transportation." We say "movie," but mean "entertainment services." We say "hotel" when we mean "lodging rental." The use of nouns obscures the fundamental nature of services, which are processes, not objects.

As processes, services have many intriguing characteristics. Judd (1964), Rathmell (1974), Shostack (1977), Bateson (1977), and Sasser, Olsen, and Wyckoff (1978) were among the first to ponder the implications of service intangibility, service perishability, production/consumption simultaneity, and consumer participation in service processes. They found that traditional marketing, with its goods-bound approaches, was not helpful in process design, process modification, or process control.

If processes are the service equivalent of a product's "raw materials," can processes be designed, managed, and changed for positioning purposes the way physical goods are? The purpose of this article is to take a closer look at processes as structural elements and suggest some ways in which they can be "engineered" for strategic service positioning purposes.

G. Lynn Shostack is Managing Director, The Coveport Group, Inc.

Journal of Marketing
Vol. 51 (January 1987), 34–43.

Process Characteristics

Processes have been studied for some time in disciplines other than marketing. Systematic, quantified methods for describing processes have been developed in industrial engineering (Deming 1982), computer programming (Fox 1982), decision theory (Holloway 1979), and operations management (Schroeder 1981), to name a few examples and well known authors in each field. Though their techniques and nomenclatures may differ, process-oriented disciplines share certain basic concepts. First, each of them provides a way of breaking any process down into logical steps and sequences to facilitate its control and analysis. Second, each includes ways to accommodate more variable processes in which outcomes may differ because of the effects of judgment, chance, or choice on a sequence. Finally, each system includes the concept of deviation or tolerance standards in recognition that processes are "real time" phenomena that do not conform perfectly to any model or description, but rather function within a band or "norm" of some sort.

Little process description can be found in marketing literature. However, several writers on services have drawn upon manufacturing sources in using the words "standardized" and "customized" to define the poles of a process continuum (see Levitt 1976; Lovelock 1984). "Standardized" usually implies a nonvarying sequential process, similar to the mass production of goods, in which each step is laid out in order and all outcomes are uniform. "Customized" usually refers to some level of adaptation or tailoring of the process to the individual consumer. The concept of deviation usually is treated as a quality issue, in reference to services that do not perform as they should.

Complexity and Divergence

Extracting from various approaches, we can suggest two ways to describe processes. One way is according to the steps and sequences that constitute the process; the other is according to the executional latitude or variability of those steps and sequences. Let us call the first factor the complexity of the process and the second its divergence. Deviation, a real-time operating factor, can then be thought of as an inadvertent departure from whatever process model and standards have been established for the first two factors.

We can define a service's complexity by analyzing the number and intricacy of the steps required to perform it. Accounting, for example, is more complex than bookkeeping because accounting is a more elaborated process, involving more functions and more steps. Architecture is more complex than plumbing. Plumbing is more complex than lawn mowing.

Apart from complexity, however, some processes include a high level of executional latitude and others do not. The degree of freedom allowed or inherent in a process step or sequence can be thought of as its divergence. A highly divergent service thus would be one in which virtually every performance of the process is unique. A service of low divergence would be one that is largely standardized.

Every service can be analyzed according to its overall complexity and divergence. A physician's services, for example, are highly complex. They are also highly divergent. As the service is being performed, a doctor constantly alters and shapes it by assimilating new data, weighing probabilities, reaching conclusions, and then taking action. Every case may be handled differently, yet all performances may be satisfactory from the consumer point of view. Architecture, law, consulting, and most other "professional" services have similarly high divergence (as well as high complexity), because they involve a considerable amount of judgment, discretion, and situational adaptation.

However, a process can be high in complexity and low in divergence. Hotel services, for example, are a complex aggregation of processes, but hotels standardize these processes through documentation and establishment of executional rules for every sequence from room cleaning to checkout. Telephone services are also highly complex, yet telephone companies have standardized and automated them to ensure uniformity and achieve economies of scale.

Services also can be low in complexity but high in divergence. In process terms, a singer renders the service of entertainment in one step: sing. This service is infinitely divergent, however, because each execution is unique and unlike that of any other provider. A painter "merely" paints, a teacher simply "transmits knowledge," a minister "spreads the gospel." These services do not consist of orderly, mechanical procedures, but of unique performances. Services that involve interpretative skills, artistic crafting, or highly individualized execution often appear simple in process terms, yet are highly divergent in operation. In fact, for such services, defining "what" is done in process terms is often easier than describing "how" it is done.

Blueprinting Complexity and Divergence in Service Systems

Though processes can be reduced to steps and sequences, services must be viewed as interdependent, interactive systems, not as disconnected pieces and parts. One approach for visualizing service systems is a mapping technique called "blueprinting" (Shostack 1984a,b). Blueprinting is a holistic method of seeing

FIGURE 1
Park Avenue Florist

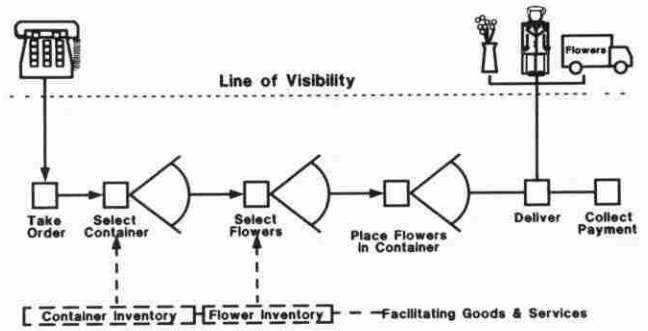

in snapshot form what is essentially a dynamic, living phenomenon.

For process design purposes, a blueprint should document all process steps and points of divergence in a specific service. This documentation must be carried to whatever level of detail is needed to distinguish between any two competing services. In other words, specific blueprints of real services are more productive than generic or generalized visualizations in working out position strategies based on process.

Figure 1 shows how one Park Avenue florist's service appears in blueprint form. The "fan" is borrowed from decision theory (see Holloway 1979) in which a fan attached to a circle is used to show a range of potential events that may occur, whereas a fan attached to a square denotes a range of potential actions that may be taken. This is a useful symbol for divergence and is used throughout the following illustrations. The florist provides a service of low complexity that is highly divergent. Though the process steps are few, the fans indicate broad executional latitude stemming from the judgment and decisions of the individual performing the service.

For comparison, Figure 2 illustrates a complex but standardized service—consumer installment lending at a large commercial bank. Here, the process has many more specific steps, but the steps are executed in a strict and unvarying manner. As Levitt would say, the service has been "industrialized" (1976). There is one and only one permissible manner and order in which the service is provided. Parts of the process have been automated for further conformity, and the bank's design for this service does not allow employees who

FIGURE 2
Installment Lending: Bank X

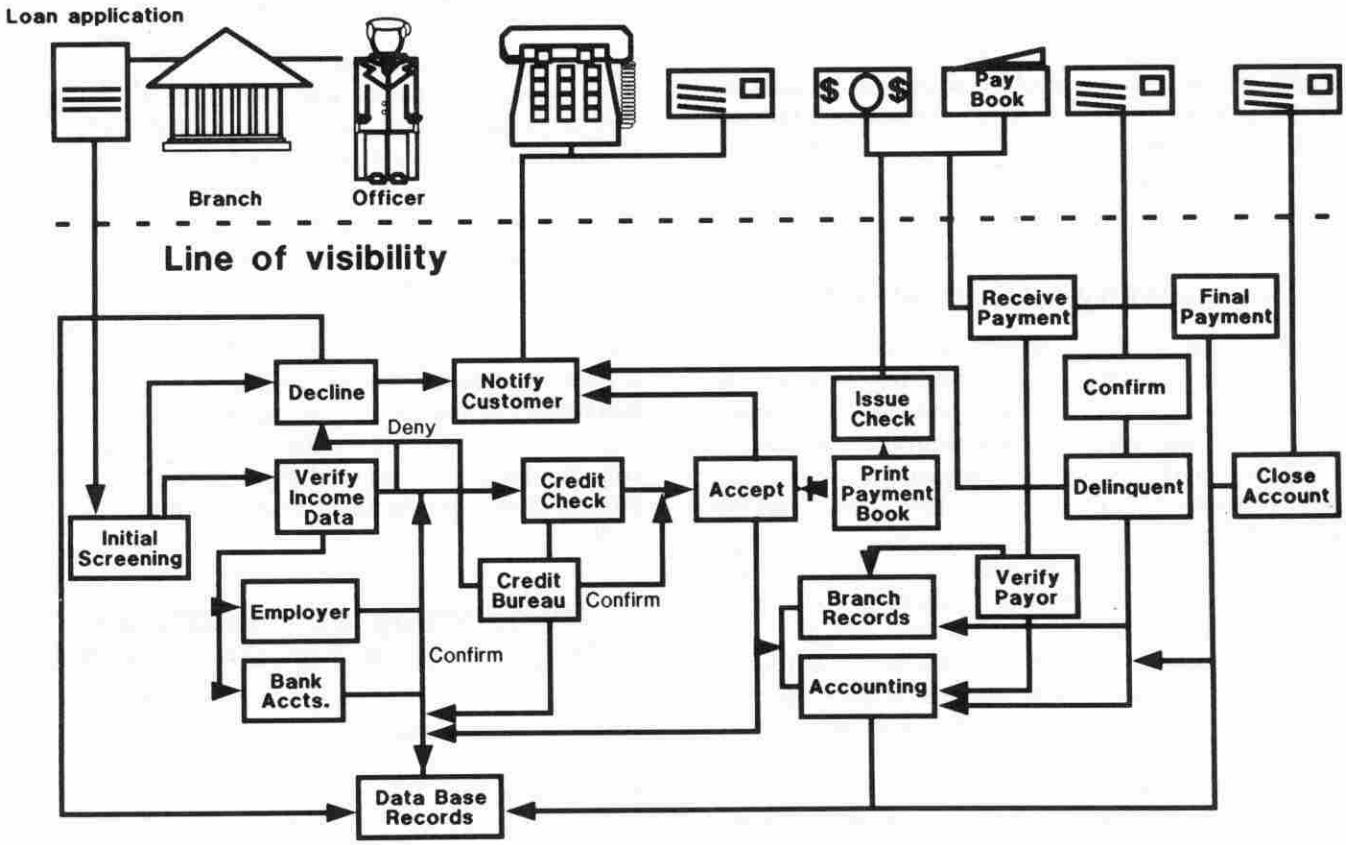

FIGURE 3
General Practitioner Services

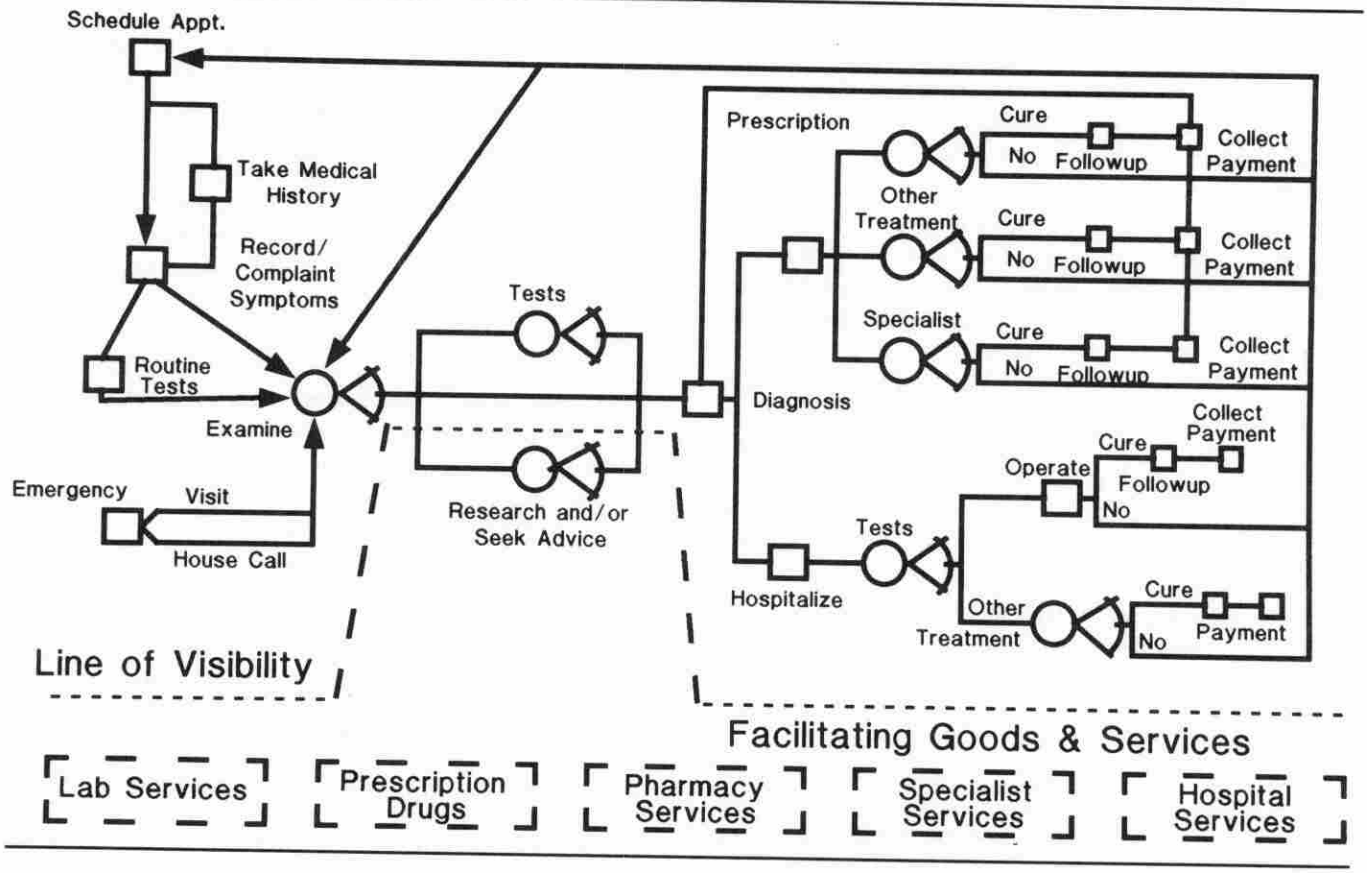

are part of the service system to modify or change the service in any way. Such a service may not function perfectly at all times. However, as noted before, such quality failures represent deviation from a design standard, whereas true divergence is an integral part of the process.

Figure 3 shows yet another structure—the highly complex and highly divergent service of a general medical practitioner. Here, not only is the process complex, but virtually every step involves variable execution.

Blueprints as a Tool in Consumer Research

It may be noted that this analytical approach is a useful and natural companion to market research. Lovelock (1984) noted the difficulty of researching service "attributes" for positioning purposes, which is caused at least partly by the inherent ambiguity and subjectivity of verbal descriptions. Blueprints provide visible portraits to which consumers can react, and which can facilitate exploration of more parts of the service system than just its processes. Blueprints can be used to educate consumers, focus their evaluative input on various aspects of the service system, elicit comparative or competitive assessments, and generate specific responses to contemplated changes or new service concepts. As Schneider and Bowen (1984) pointed out, regardless of whether consumers are privy to or even aware of all parts of the process, their awareness of its results and evidence makes them potentially valuable participants in the design of the entire system, not just those parts they see.

Changing the Process

Complexity and divergence are not fixed and immutable. They are factors that can be changed. Once a service has been documented accurately, it can be analyzed for opportunities either to increase or decrease one or both variables.

Alternative Directions for Structural Change

A change in overall complexity or divergence generally indicates one of four overall strategic directions. Each one has management consequences as well as certain market risks.

Reduced divergence. Reducing divergence leads to uniformity which tends to reduce costs, improve productivity, and make distribution easier. It usually indicates a shift to a volume-oriented positioning strategy based on economies of scale. The positive market effects of such a move can include perceived

increases in reliability—more uniform service quality and greater service availability. However, reducing divergence also can have negative market effects. It dictates conformity as well as inflexibility in operating procedures. Customers may perceive the shift as one that lowers customization and limits their options, and may reject a highly standardized service even if it costs less.

Increased divergence. Raising divergence is the service equivalent of creating a "job shop." Greater customization and flexibility tend to command higher prices. Increased divergence usually indicates a niche positioning strategy, dependent less on volume and more on margins. The market can respond positively to such a shift if the service taps a desire for prestige, customization, or personalization. Here, too, however, care is needed in making such a shift. A divergent service is more difficult to manage, control, and distribute. Moreover, customers may not be willing to pay the price that customization demands.

Reduced complexity. Reduced complexity usually indicates a specialization strategy. As steps or functions are dropped from the system, resources can be focused on a narrower service offering (radiology, for example, versus general medical services). Narrowing the service offering usually makes distribution and control easier. Such a service can be perceived positively by the market if the provider stands out as an expert. However, reduced complexity also can cause a service to be perceived as "stripped down" or so limited that its specialized quality is not enough to overcome the inconvenience or price of obtaining it. Reducing complexity can be competitively risky if other providers continue to offer a broader, more extensive full-service alternative.

Increased complexity. Higher complexity usually indicates a strategy to gain greater penetration in a market by adding more services or enhancing current ones. Supermarkets, banks, and retailers have expanded their service lines with this strategic goal in mind. Increasing complexity can increase efficiency by maximizing the revenue generated from each customer. In contrast, too much complexity can be confusing to customers and can cause overall service quality to fall. Thus, a highly complex service system may be vulnerable to inroads by competitors who specialize.

Marketing Strategy and Structural Change

Service industries offer numerous examples of changes in complexity and divergence and how they affect market position. Barbering, for example, is a relatively simple service, but beginning in the 1970s some providers began to reposition it. They added processes borrowed from women's beauty salons, such as tinting, body perms, and backcombing, redefined their mission, and transformed "hair cutting" into "hair styling"—a more complex, divergent service structure. Hair styling tapped or created a new market segment of men willing to pay substantially higher prices for a more elaborated process and carved a niche in the market through structural differentiation.

In retailing, there are many examples of adding to the complexity of service systems. Supermarkets began as specialty food stores and have added banking services, pharmacist services, flowers, books and magazines, and even food preparation to their basic food retailing structure. In the fast-food industry, what were once simple hamburger outlets have become providers of breakfast, dining room services, and even entertainment. Retailing also affords many examples of reducing complexity, as evidenced by the emergence of businesses specializing only in pasta, only in cookies, and only in ice cream.

For examples of lowered divergence, we need only to look at professional services. Legal services, for instance, have historically had both high complexity and high divergence. A consumer needing legal assistance first had to seek out and select an attorney, and was then dependent upon the variable performance of that individual. Over the past few years, however, this service has been repositioned through the actions of business-minded entrepreneurs who perceived a market need for less complex, less divergent alternatives. The result has been the creation of legal "clinics" and chains that offer a limited menu of services executed uniformly at published rates. This repositioning not only has opened a new market for legal services, but also has had and will continue to have a profound effect on the positioning strategies of traditional law firms.

A similar downshifting and repositioning of traditional personal accountant services was effected by the innovations of H & R Block, which tapped a vast market of consumers who did not require the variable and costly services of a personal accountant, but who were willing to pay someone else to prepare their tax returns.

Most of these examples are based on entrepreneurial response to the perception of an unmet market need. What is perhaps less clearly recognized is that such changes need not be intuitive or accidental. They can be made deliberately to support explicit positioning or competitive strategies.

Implications of Service System Changes

Let us assume that Figure 1 is an accurate representation of a specific florist's service. Assume further

that in an analysis of competitors, very similar structures were found. One strategic option to reposition and differentiate the service would be to re-engineer it as a less divergent system. Figure 4 illustrates a redesigned blueprint that accomplishes this objective. The number of container choices has been limited to two; there are only two groups of flowers and only two choices of arrangement for each group. Thus, only eight combinations are possible.

Obviously, the new design has implications for inventory management as well as productivity. Inventory can be ordered in larger, more economic quantities. More arrangements can be produced by the florist because the process is more standardized. These two effects will lower prices and potentially allow the service to be repositioned to a broader market. The new structure also will allow wider service distribution, because simpler blueprints are easier to replicate. FTD (Florists' Transworld Delivery) arrived at a similar conclusion and expanded florist services from a local craft into a national service industry.

However, if all the florists in a particular market had structures similar to Figure 4, a logical positioning strategy might be to move toward the design shown in Figure 1—a highly artistic, high-priced structure. Alternatively, a marketer might choose to increase complexity alone, through retailing a selection of plants and supplies, or to increase both complexity and divergence by offering flower arranging classes.

Identifying and Evaluating Strategic Choices

Services can be structurally evaluated on a stand-alone basis and also as members of service families. Within a service family, a marketer can consider positioning strategies based on structural complementarity, structural diversity, and overall developmental direction.

In Figure 2, a bank's consumer installment lending service is diagrammed. This service, of course, is only one of a constellation of services that constitute consumer banking. Though consumer banking, in its totality, is an extraordinarily complex service system, most blueprints of its component services would show low divergence stemming from 20 years of effort to standardize and automate the service system.

One strategy for a bank with this structure is to continue increasing complexity by adding more subservices while continuing to minimize divergence through standardization and automation. For a com-

FIGURE 4
Florist Services: Alternative Design

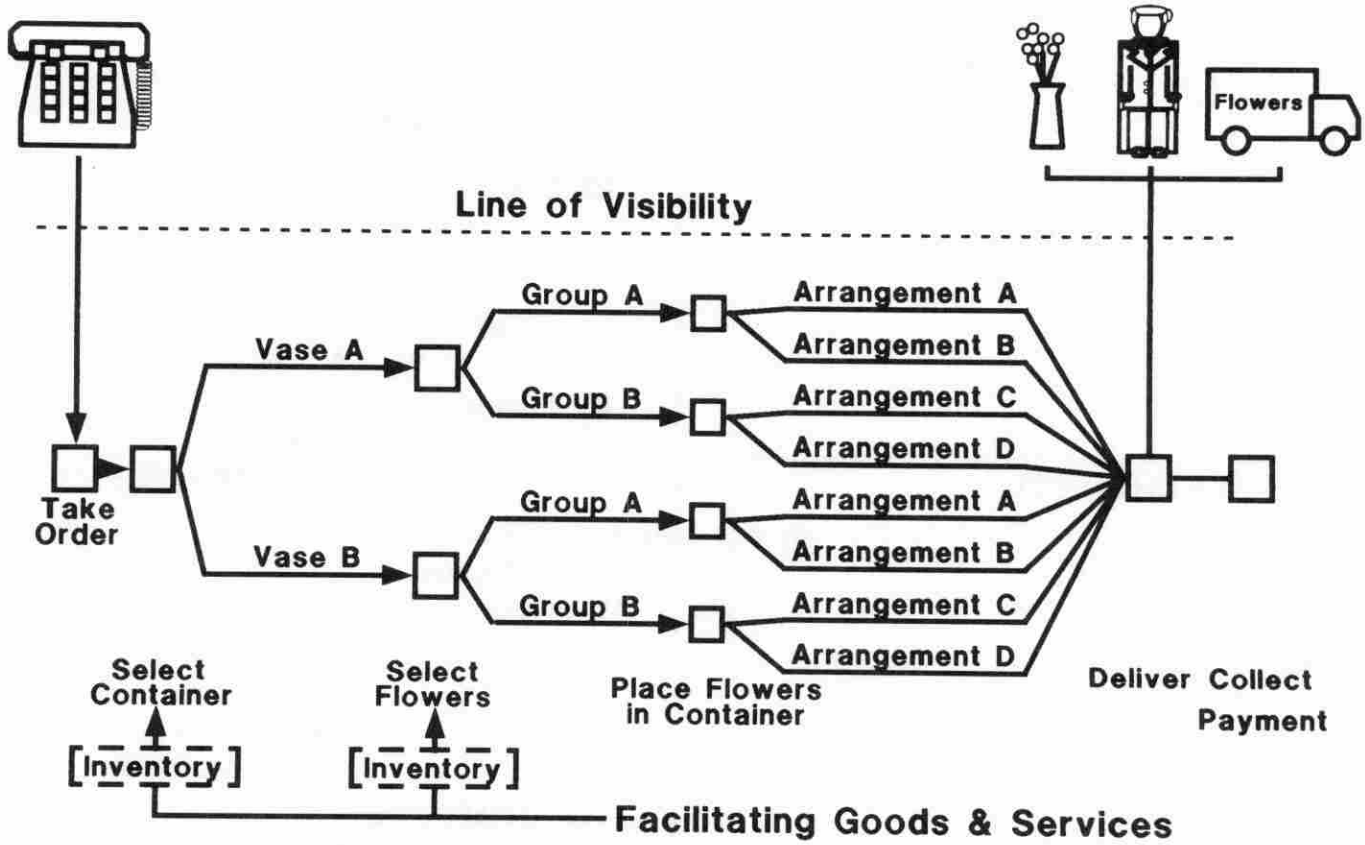

petitor, an equally valid strategy would be to adopt the counterposition, which would call for increasing the customization of services. The latter strategy is evident in banks offering "private" banking, an integrated package of services for the upscale market that includes such divergent services as customized lending, portfolio management, and financial planning.

The general practitioner previously described also has numerous strategic choices. Figure 5 illustrates the relative structural positions held by a number of medical service providers, including the general practitioner analyzed in Figure 3. From the present position, he/she can move in any direction on the scale by adding or deleting service functions to create a new family. Depending on the complexity and divergence of these functions, the overall service system's complexity and divergence will change, thus altering its relative position.

For example (Figure 6), retailing orthopedic supplies would add complexity to the doctor's overall service system, but little divergence. Adding counseling, in contrast, would add considerable divergence, but little operational complexity. Conversely, if minor surgical procedures that have been performed in the office were eliminated, the service system would be reduced in both complexity and divergence and move closer to the position held by diagnosticians, who perform no treatment themselves. At the extreme position, complexity and divergence could be lowered to the point where only the simple service, such as X-rays, is provided in a completely standardized way. Consumer research can be instrumental in facilitating this strategic process, and blueprints are a useful tool for focusing consumer input and response to new structural concepts.

In simplified terms, Figure 7 shows some changes that a midpriced family restaurant might consider to alter complexity and divergence for competitive purposes. Any prospective change or mix of changes can be compared with competitors' offerings to determine which mix is most likely to provide the maximum competitive differentiation.

Positioning charts are a useful tool for market analysts wishing to compare the perceived performance of competing services on two or three attributes simultaneously. Examples of such charts (also known as perceptual maps) are given by Tybout and Hauser (1981) and Lovelock (1984). Blueprinting works well in tandem with this technique by serving as a focal point for determining which parts of the service system or process components are important to the market, and in evaluating change across many elements of the system.

FIGURE 5
Relative Positions Based on Structural Analysis

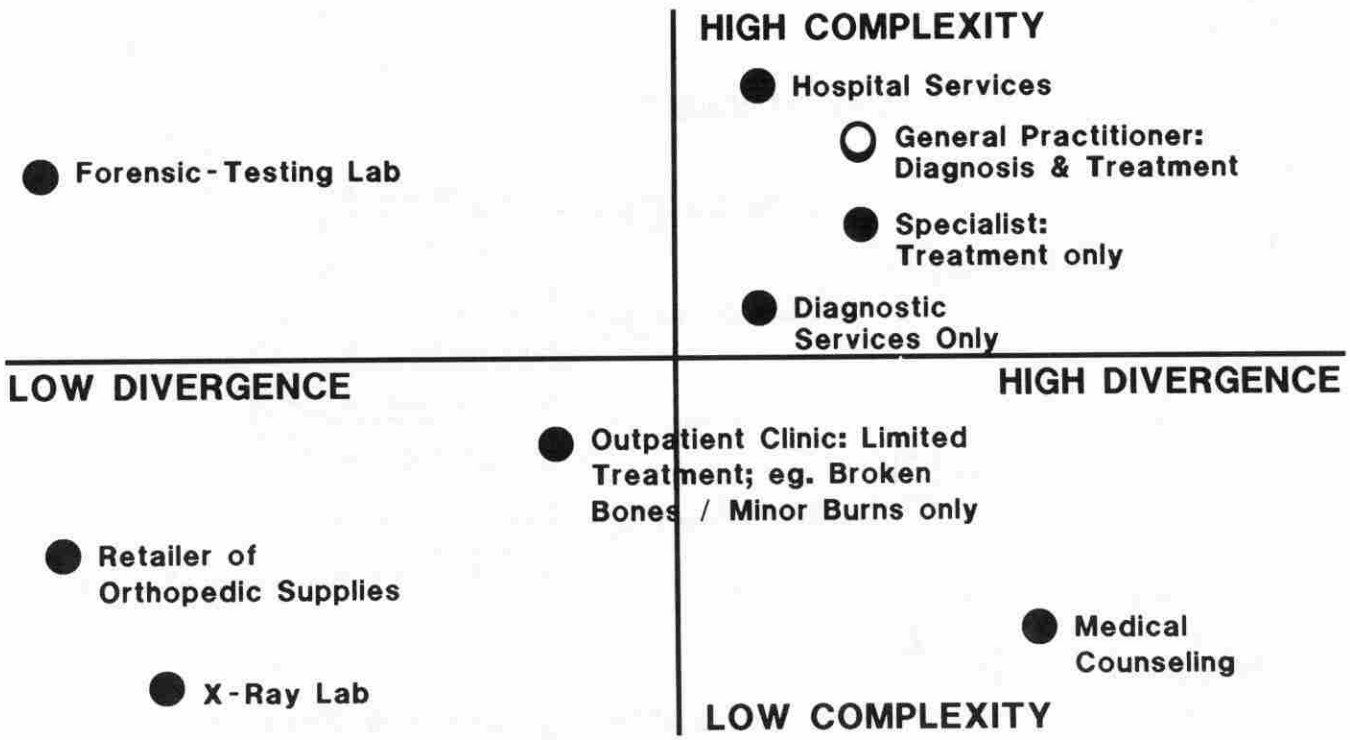

FIGURE 6
Positional Shifts Through Structural Change

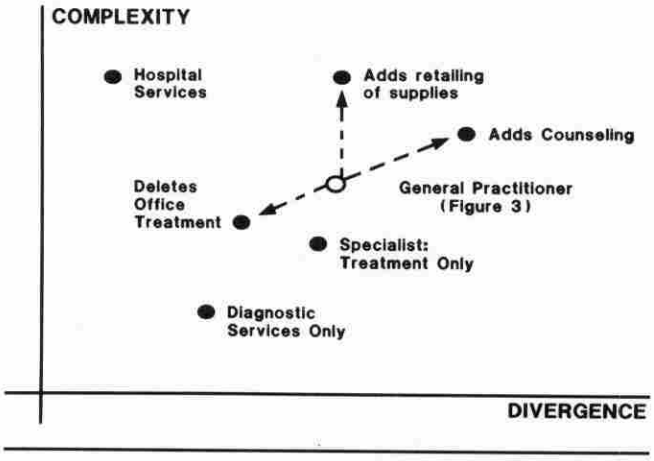

Implementing Change

Though processes are intangible, the means by which services are rendered are very real. There are only two, people (both providers and consumers) and facilitating goods. Any shift in overall complexity or divergence, or the introduction of any new process design, must be implemented with a clear understanding of the potential impact on these "producers" of the process.

Role of Service Employees and Customers

Considerable attention has been paid to people in the service system. Whether they are providers or consumers, the management and control of human behavior is a critical factor in process design, change, and operating quality. Mills (1985) suggests that management controls over service employees should depend on the structure of the service system. For low-contact, standardized services, behavior can be controlled through mechanistic means, such as rules and regulations. However, for high-contact, divergent services, Mills suggests that employee self-management and peer-reference techniques are more effective. Smith and Houston (1983), in contrast, propose that a script-based approach to managing customer and employee behavior can help to control expectations as well as process compliance. Bowen and Schneider (1985) speak of "boundary spanners," that is, employees with high customer interaction, as a valuable source of design information and as change agents whose acceptance and commitment are critical to success in altering any process. Schneider and Bowen (1984) as well as others (Berry 1983; Heskett 1986) stress that employee involvement and "internal" marketing to employees are important factors in ensuring successful service operations. Deming (1982), however, argues that both behavior and motivation are controlled by the design of the process itself and that if the process is properly designed, high motivation and effectiveness will be the natural results.

FIGURE 7
Structural Alternatives

LOWER COMPLEXITY/DIVERGENCE	CURRENT PROCESS	HIGHER COMPLEXITY/DIVERGENCE
No Reservations ←	TAKE RESERVATION	→ Specific Table Selection
Self-seating. Menu on Blackboard ←	SEAT GUESTS, GIVE MENUS	→ Recite Menu: Describe Entrees & Specials
Eliminate ←	SERVE WATER AND BREAD	→ Assortment of Hot Breads and Hors d'oeuvres
Customer Fills Out Form ←	TAKE ORDERS	→ At table. Taken Personally by Maitre d'
	PREPARE ORDERS	
Pre-prepared: No Choice ←	• Salad (4 Choices)	→ Individually Prepared at Table
Limit to Four Choices ←	• Entree (15 Choices)	→ Expand to 20 Choices: Add Flaming Dishes; Bone Fish at Table; Prepare Sauces at Table
Sundae Bar: Self-service ←	• Dessert (6 Choices)	→ Expand to 12 Choices
Coffee, Tea, Milk only ←	• Beverage (6 Choices)	→ Add Exotic Coffees; Wine List; Liqueurs
Serve Salad & Entree Together: Bill and Beverage Together ←	SERVE ORDERS	→ Separate Course Service: Sherbet Between Courses; Hand Grind Pepper
Cash Only: Pay When Leaving ←	COLLECT PAYMENT	→ Choice of Payment. Including House Accounts: Serve Mints

In terms of consumer participation, Lovelock and Young (1979), Chase (1978), Bateson (1985), and others have discussed whether and how to involve consumers in the service process, and the management of their involvement. Chase argues that consumer participation should be kept to a minimum in the interests of greater process efficiency. However, as we have seen, process design offers many routes to market success. A service (self-service gasoline stations, for example) can be designed for maximum consumer participation and still be profitable. In fact, Bateson's (1985) work suggests that consumers can be segmented on the basis of control needs, resulting in services that are designed to capitalize profitably on the consumer's own desire for participation.

These brief descriptions illustrate the richness and diversity of current thought about the human side of service systems. Our purpose here is not to choose one approach over another, but to underscore the fact that people are just as important as structural design. If people issues are not addressed effectively, even the best design will fail.

Role of Facilitating Goods

Facilitating goods are also important in structural planning. Educational services, for example, can be rendered by a human being who lectures in a traditional classroom setting. Education also can be rendered via videotape, television, computer, and book, to name just a few alternative facilitating goods. For the designer of a new or different educational service, any of these choices will yield a different service structure. These structures will differ in complexity and divergence, as well as in cost dynamics, distribution constraints, and market position.

Sometimes facilitating goods are used as a replacement for human performance to reduce divergence. Computers are the prime example of a good that has been used in this way to standardize service systems. However, simplification is not the only use for technology. Technology also can be used to increase complexity and divergence. When bank automated teller machines first were introduced, for example, they could deliver only simple cash dispensing and deposit services. Now, technology has allowed the addition of funds transfer and investment services to the system, increasing its overall complexity. Tomorrow, what are called "smart" cards will make possible the delivery of a wide range of credit, payment, and information services. Ultimately, technology may even make possible a degree of customization (i.e., divergence) that only human providers can now deliver.

For all these reasons, the consideration of changes to any service structure demands an appreciation of the interrelatedness and intricacy of service systems. Unlike a product, a service cannot be engineered and then made in a factory. "Producing" a service is a dynamic, continuous event.

Conclusion

Though our discussion focuses on process design, other elements of the service system can and do affect market position. Advertising and promotion are, of course, powerful forces in the positioning process. American Express, for example, has repositioned its credit services to women solely through advertising.

Distribution channels also affect market position. Marketing stock brokerage through Sears stores is one example of positioning a service to a new, broader consumer base through a change in distribution channels. Moreover, as Shostack (1985), Blackman (1985), and others have noted, various forms of physical service evidence, from the environment in which a service is rendered to the correspondence, brochures, signage, and even people to which a customer is exposed, can affect position. Facilitating goods also can affect position, even without process change. A provider who substitutes limousines for taxicabs, for example, may succeed in charging higher prices and tapping a different market for exactly the same transportation service.

In short, the issues involved in service positioning are numerous, and this discussion by no means encompasses all of the subjects relevant to the positioning process. In a structural sense, however, processes themselves appear to have characteristics that not only affect market position, but also can be deliberately and strategically managed for positioning purposes. By manipulating complexity and divergence, a service marketer can approximate some of the product analysis and design functions that are traditional in product marketing. Moreover, the use of blueprints provides a mechanism through which services can be "engineered" at the drawing board, as well as a tool for identifying gaps, analyzing competitors, aiding in market research, and controlling implementation.

The marketplace affords evidence that both complexity and divergence are concepts that are understood and employed in service industries. Though the practice is not formalized, it works. How much more powerful the result might be if marketers brought a professional discipline, capable of crafting service systems on a rational basis, to bear on the service positioning task!

For managers in service industries, taking a structural approach can help increase their control over some of the most critical elements of service system management. For marketers, process design may be a tool that can substantially increase their impact and role in the service sector and help service marketing come of age.

REFERENCES

Bateson, John E. G. (1977), "Do We Need Service Marketing?", *Marketing Consumer Services: New Insights*, Report #77-115. Cambridge, MA: Marketing Science Institute.

——— (1985), "Perceived Control and the Service Encounter," in *The Service Encounter*, John Czepiel et al., eds. Lexington, MA: Lexington Books.

Berry, Leonard L. (1983), "Relationship Marketing," in *Emerging Perspectives on Services Marketing*, Leonard L. Berry et al., eds. Chicago: American Marketing Association, 25–8.

Blackman, Barry A. (1985), "Making a Service More Tangible Can Make It More Manageable," in *The Service Encounter*, John Czepiel et al., eds. Lexington, MA: Lexington Books.

Bowen, David E. and Benjamin Schneider (1985), "Boundary-Spanning-Role Employees and the Service Encounter," in *The Service Encounter*, John Czepiel et al., eds. Lexington, MA: Lexington Books, 124–47.

Chase, Richard B. (1978), "Where Does the Consumer Fit In a Service Operation?", *Harvard Business Review*, 56 (November–December), 137–42.

Deming, W. Edwards (1982), *Quality, Productivity and Competitive Position*. Cambridge, MA: Massachusetts Institute of Technology, Center for Advanced Engineering Study.

Fox, Joseph M. (1982), *Software and Its Development*. Englewood Cliffs, NJ: Prentice-Hall, Inc.

Heskett, James L. (1986), *Managing in the Service Economy*. Boston: Harvard Business School Press, 45–74, 117–34.

Holloway, Charles A. (1979), *Decision Making Under Uncertainty: Models and Choices*. Englewood Cliffs, NJ: Prentice-Hall, Inc.

Judd, Robert C. (1964), "The Case for Redefining Services," *Journal of Marketing*, 28 (January), 58–9.

Levitt, Theodore (1976), "The Industrialization of Service," *Harvard Business Review*, 54 (September/October), 63–74.

Lovelock, Christopher H. (1984), *Services Marketing, Text, Cases, & Readings*. Englewood Cliffs, NJ: Prentice-Hall, Inc., 55–6, 133–9.

——— and Robert F. Young (1979), "Look to Consumers to Increase Productivity," *Harvard Business Review*, 57 (May–June), 168–78.

McLuhan, Marshall (1964), *Understanding Media*. New York: McGraw-Hill Book Company.

Mills, Peter K. (1985), "The Control Mechanisms of Employees at the Encounter of Service Organizations," in *The Service Encounter*, John A. Czepiel et al., eds. Lexington, MA: Lexington Books.

Rathmell, John M. (1974), *Marketing in the Service Sector*. Cambridge, MA: Winthrop Publishers, Inc.

Ries, Al and Jack Trout (1981), *Positioning*. New York: McGraw-Hill Book Company.

Sasser, W. Earl, Jr., R. Paul Olsen, and D. Daryl Wyckoff (1978), *Management of Service Operations: Text, Cases, and Readings*. Boston: Allyn & Bacon.

Schneider, Benjamin and David E. Bowen (1984), "New Service Design, Development and Implementation," in *Developing New Services*, William R. George and Claudia Marshall, eds. Chicago: American Marketing Association, Proceedings Series, 82–102.

Schroeder, Roger G. (1981), *Operations Management*. New York: McGraw-Hill Book Company.

Shostack, G. Lynn (1977), "Breaking Free From Product Marketing," *Journal of Marketing*, 41 (April), 73–80.

——— (1984a), "A Framework for Service Marketing," in *Marketing Theory, Distinguished Contributions*, Stephen W. Brown and Raymond P. Fisk, eds. New York: John Wiley & Sons, Inc., 250.

——— (1984b), "Designing Services That Deliver," *Harvard Business Review*, 62 (January–February), 133–9.

——— (1985), "Planning the Service Encounter," in *The Service Encounter*, John Czepiel et al., eds. Lexington, MA: Lexington Books, 243–53.

Smith, Ruth A. and Michael J. Houston (1983), "Script-Based Evaluation of Satisfaction with Services," in *Emerging Perspectives on Services Marketing*, Leonard Berry et al., eds. Chicago: American Marketing Association.

Tybout, Alice M. and John R. Hauser 1981, "A Marketing Audit Using a Conceptual Model of Consumer Behavior: Application and Evaluation," *Journal of Marketing*, 45 (Summer), 82–101.